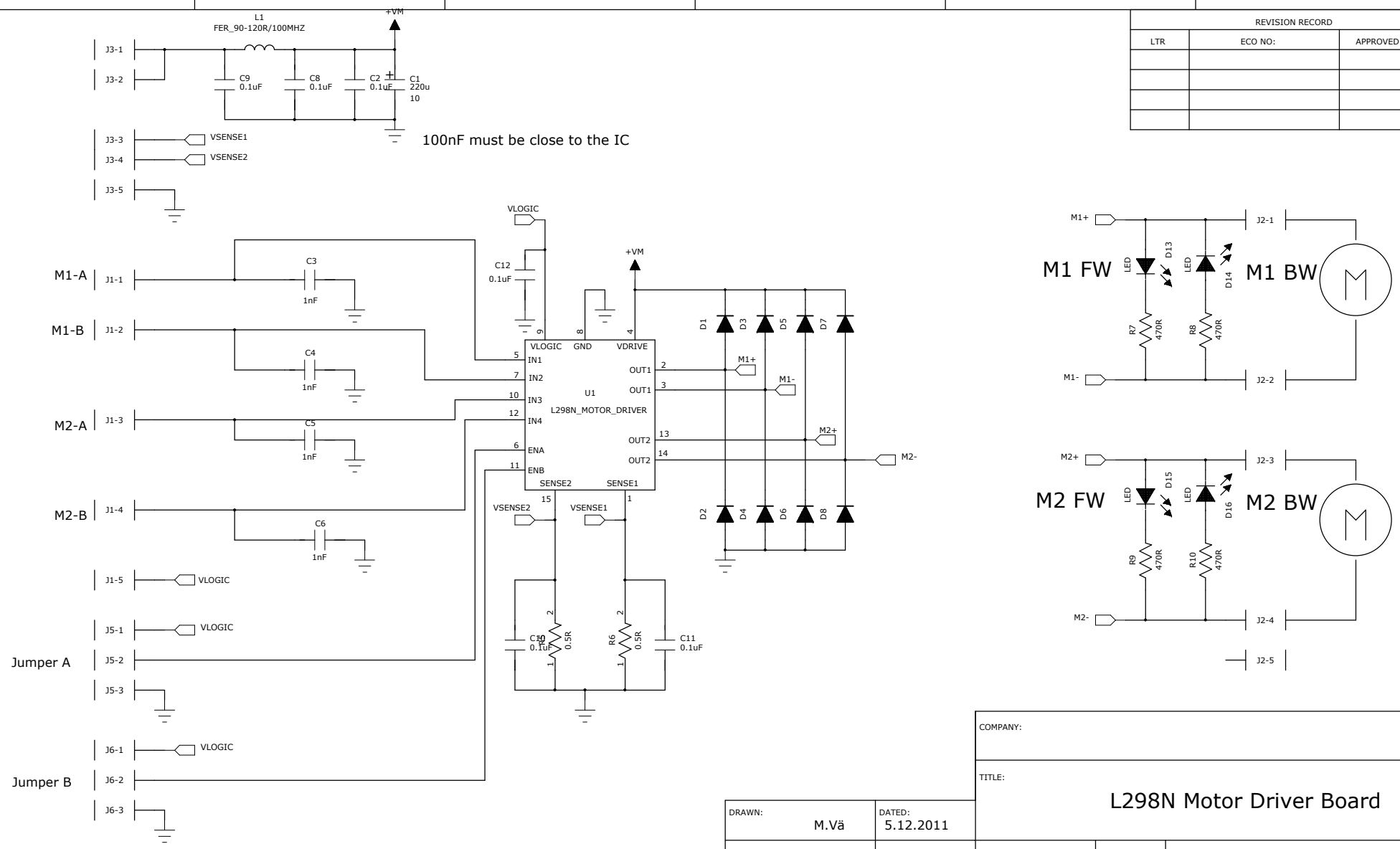

REVISION RECORD			
LTR	ECO NO:	APPROVED:	DATE:

Tested 6.12.2011 -> OK

DRAWN: M.Vä	DATED: 5.12.2011
CHECKED:	DATED:
QUALITY CONTROL:	DATED:
RELEASED:	DATED:

COMPANY:

TITLE:

L298N Motor Driver Board

CODE:	SIZE:	DRAWING NO:	REV:

SCALE:

SHEET: 1